Technical data sheet

Flat angle, asymmetrical, falling, for device installation trunking Rapid 80 type GS-A70170
Item number: 6277830

Flat angle, falling, for changing the direction of the GS device installation trunking.

St Steel

Master data

Item number	6277830
Type	GS-AFF70170RW
Description 1	Flat angle
Description 2	falling asymmetrical
Manufacturer	OBO
Dimension	70x170x300
Colour	Pure white; RAL 9010
Material	Steel
Smallest sales unit	1
Unit of quantity	Piece
Weight	152 kg
Weight unit	kg/100 pc.
CO2 Footprint (GWP) Cradle-to-Gate	7,1581 kg CO2e / 1 Piece

Technical data sheet

Flat angle, asymmetrical, falling, for device installation trunking Rapid 80 type GS-A70170
Item number: 6277830

Dimensions

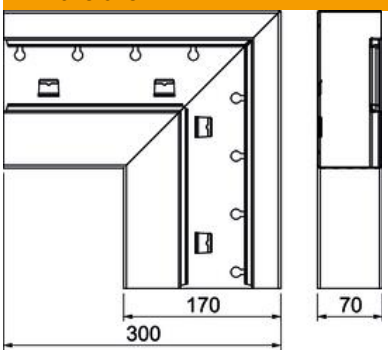

Length	300 mm
Width	170 mm
Height	70 mm

Technical data

Number of covers	1
Version for	Base
for duct width	170 mm
for trunking height	70 mm
Halogen-free	yes
Cable retaining clip	no
Duct connector	no
Cover mounting type	Internal
Mounting perforation in base	yes
Cover width	76.5 mm
Change of direction	Vertical, falling
Protection rating	IP30
Protective film	yes
Protection rating IK code	IK10
Symmetrical	no
Permitted temperature range, max.	60 °C
Permitted temperature range, min.	-25 °C
Angle range, min.	90 mm