Technical data sheet

90° bend 60, OBO EcoLine, FS

Item number: 6036577

90° bend made from CO2-reduced steel, for the creation of a horizontal branch. Fitting for latchable and screwable cable trays, side height 60 mm. Screwless mounting with double clamps or screw connection with FRS truss-head screws and M6 combination nuts. Can be used in indoor areas. Fastening material must be ordered separately.

St ECO Steel, CO2 reduced

FS Strip galvanised

Master data

Item number	6036577
Type	RB 90 620 FS ECO
Description 1	90° bend
Description 2	for cable tray, horizontal
Available from	06.03.2026
Manufacturer	OBO
Dimension	60x200
Colour	zinc
Material	Steel, CO2 reduced
Surface	Strip galvanised
Surface standard	DIN EN 10346
Smallest sales unit	1
Unit of quantity	Piece
Weight	89 kg
Weight unit	kg/100 pc.
CO2 Footprint (GWP) Cradle-to-Gate	1,5303 kg CO2e / 1 Piece

Technical data sheet

90° bend 60, OBO EcoLine, FS

Item number: 6036577

Dimensions

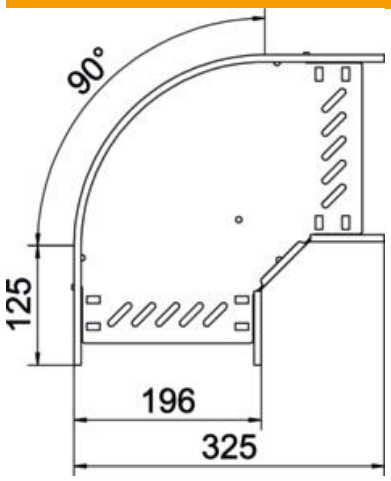

Width	200 mm
Height	60 mm
Plate thickness	0.8 mm
Dimension B	200 mm

Technical data

Bend (angle)	90°
Connector version	Integrated connector
Type	Bend, rigid
Maintain electrical functions	yes
Material thickness, floor plate	0.8 mm
Mounting perforation in base	yes
NATO hole pattern	no
Change of direction	Horizontal
ROHS-conformant	yes
Rustproof steel, pickled	no
Side perforation	yes
Permitted temperature range, max.	120 °C
Permitted temperature range, min.	-20 °C
Wide-span version	no
Type of connector, cable support system	screwed/clamped
Recommended quantity of bolts	12 St.
Rail thickness	1.25 mm