Technical data sheet

Skirting trunking SLT 2050

Item number: 6132218

SL-T skirting trunking for covered cable routing in internal areas. The colour of the trunking bases can vary depending on the production method.
With snap-on cover and base, with base perforation for direct wall mounting.
Carry out a change of direction using a mitre cut and close the trunking ends with end pieces. Service outlet for mounting power and data technology. With carpet strip for a clean finish.
Tested according to DIN EN 50085-1 and DIN EN 50085-2-1.
Base and cover packed as a set in a box. The trunking couplings must be ordered separately.

PVC Polyvinylchloride

Master data

Item number	6132218
Type	SLT 2050 rws
Description 1	Skirting trunking
Description 2	SL-T Set 20x50 carpet 9010
Manufacturer	OBO
Colour	Pure white; RAL 9010
Material	Polyvinylchloride
Smallest sales unit	2
Unit of quantity	Metre
Weight	40.2 kg
Weight unit	kg/100 m
CO2 Footprint (GWP) Cradle-to-Gate	0,8559 kg CO2e / 1 Meter

Technical data sheet

Skirting trunking SLT 2050

Item number: 6132218

Dimensions

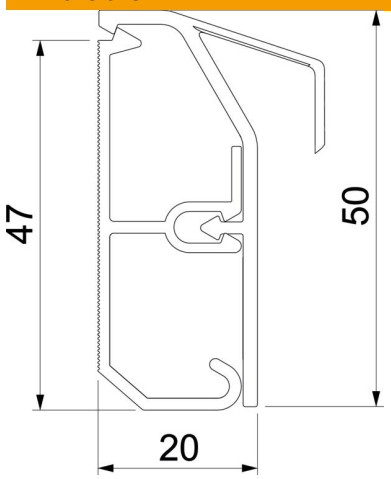

Length	2,000 mm
Width	50 mm
Height	20 mm

Technical data

Number of fixed partitions	1
Decoration	Without
Cover sealing lip	Without
Halogen-free	no
With carpet strip	yes
Mounting perforation in base	yes
Usable cross-section	580 mm²
Protection rating	IP40
Protective film	no
Protection rating IK code	IK06
Permitted temperature range, max.	60 °C
Permitted temperature range, min.	-5 °C