Technical data sheet

Support rail MagicFix

Item number: 6426312

Support rail for light cable trays, mesh cable trays and cable ladders for the creation of pendulum suspensions and centre suspensions. Tool-free fastening through clamp mount for mesh cable trays or additional quick connector MagicFix for trays and ladders. Alternatively, screw fastening possible Suspension with suspension strips Magic Fix. Tool-free fastening of the support rail on suspension strips through fastening straps.

St	Steel
FS	Strip galvanised

Master data

Item number	6426312
Type	TSM 500 FS
Description 1	Support rail MagicFix
Manufacturer	OBO
Dimension	22x45x571
Colour	zinc
Material	Steel
Surface	Strip galvanised
Surface standard	DIN EN 10346
Smallest sales unit	1
Unit of quantity	Piece
Weight	47.9 kg
Weight unit	kg/100 pc.

Technical data sheet

Support rail MagicFix

Item number: 6426312

Dimensions

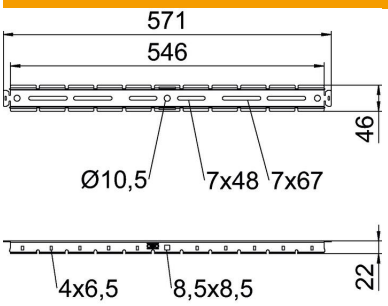

Length	546 mm
Width	46 mm
Height	22 mm
Dimension L	546 mm
Dimension L2	571 mm
Maß sH	7x48/67 mm

Technical data

Version for	Support profile
Maintain electrical functions	no
Suitable for mesh cable tray	yes
Suitable for cable ladder	yes
Suitable for cable tray	yes
Hole diameter	10.5 mm
Material thickness	1.5 mm
ROHS-conformant	yes
Rustproof steel, pickled	no
Hinged	no
Permitted temperature range, max.	120 °C
Permitted temperature range, min.	-20 °C
Adjustable	no

Loads

Safe working load of suspended installation with ASM for cable trays (SWL)	1.25 kN
Safe working load of suspended installation with ASM for mesh cable trays (SWL)	1.3 kN