Technical data sheet

Cap nut cable gland, EMC, metric thread, nickel-plated

Item number: 2086231

With metric connecting thread to IEC 423, robust EMV cap-nut cable gland with large sealing area. Strain relief, wringing protection and tightness over the whole clamping area. Neoprene sealing ring. Polyamide terminal insert. With pre-mounted O sealing ring on connection thread, VDE-tested to DIN EN 50262, protection rating IP 68 at 5 bar for 1 hr.

* Prices according to DEL notation.

IP 68 M

CuZn 37 Brass

N Nickel-plated

Master data

Item number	2086231
Type	V-TEC VM63 EMV
Description 1	Cable gland EMV
Description 2	for cable with shielding
Manufacturer	OBO
Dimension	M63
Material	Brass
Surface Surface standard	Nickel-plated
Smallest sales unit	5
Unit of quantity	Piece
Weight	33.99 kg
Weight unit	kg/100 pc.
CO2 Footprint (GWP) Cradle-to-Gate	0,8703 kg CO2e / 1 Piece

Technical data sheet

Cap nut cable gland, EMC, metric thread, nickel-plated

Item number: 2086231

Dimensions

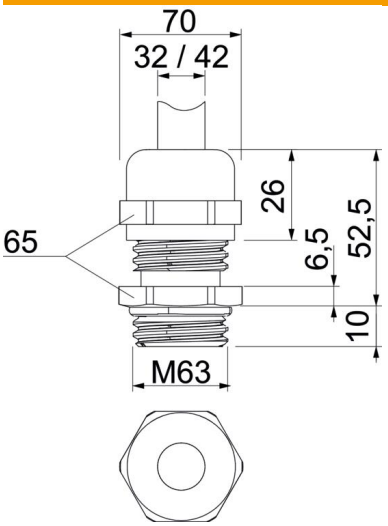

Dimension E	70 mm
Dimension L max.	52.5 mm
Dimension L1	10 mm
Dimension L2	6.5 mm
Dimension L3	26 mm

Technical data

Type of seal	Sealing ring
Version for	Straight
Bend protection	no
Sealing area D, max.	42 mm
Sealing area D, min.	32 mm
Flat cable gland	no
For Ex zone	Without
Thread	M63 x 1,5
Thread type	Metric
Thread length	10 mm
Fibre-glass reinforced	no
Halogen-free	no
Unstable torque	13.5 Nm
Impact category	7
Strain relief category	A
Sealing insert, multiple	no
With locknut	no
ROHS-conformant	Exempt
Impact-resistant	no
WAF	65
Protection rating	IP68
Permitted temperature range, max.	100 °C
Permitted temperature range, min.	-20 °C
Strain relief option	yes